CONFLUO PREMIUM TILE
Ceramic 2 / Black Glass 2 / White Glass 2
Tehnicki crtez

Ceramic 2 / Black Glass 2 / White Glass 2
Presek (*isti u sva 3 slučaja)

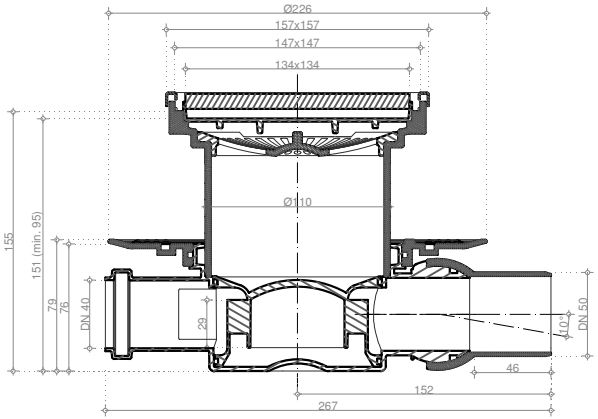

CERAMIC 2
Varijanta rešetke

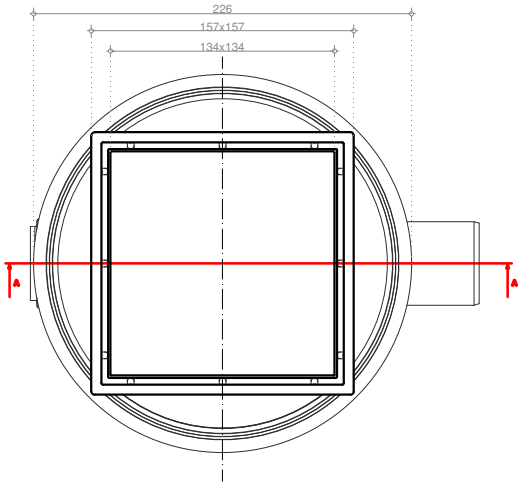

BLACK GLASS 2
Varijanta rešetke

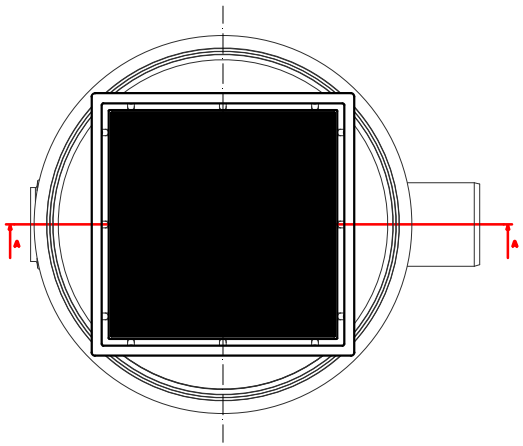
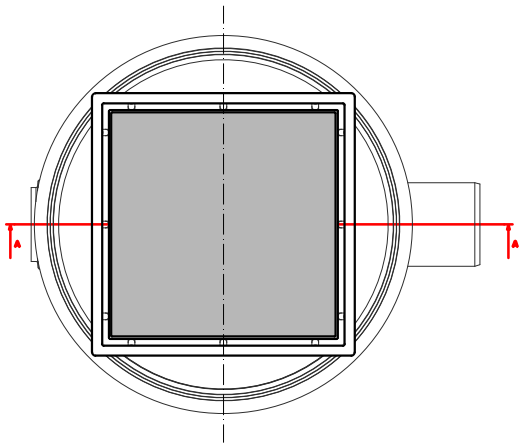
WHITE GLASS 2
Varijanta rešetke